imtra
MARINE LIGHTING

www.imtra.com

Imtra PowerLED and PWM Dimmer

Installation and Operation

Imtra Corporation 30 Barnet Boulevard, New Bedford, MA 02745 U.S.A. Ph: 508.995.7000 Fax: 508.998.5359

Overview

The IMTRA PowerLED series of spots & fixtures include; Newport PWL, Ventura PWL, Gibraltar PWL, Tacoma 155 PWL, Norfolk PWL, Portland PWL, Hatteras PWL, Avalon 105 PWL, Avalon 155 PWL. These high brightness LED downlights are uniquely suited for marine and automotive installation. Their design is based on solid state, Light Emitting Diode (LED) technology that offers greater reliability, lower power consumption, and less radiated heat than traditional incandescent lamps. When operated properly, these products will provide years of trouble free operation.

All these products are available with a choice of LED color and a selection of bezel finishes. When installed and operated with an IMTRA approved PWM dimmer, up to 15 fixtures can be varied simultaneously through the full range of light output, from full bright to off, from one dimmer.

All Imtra PowerLEDs operate on 10-30VDC. The exception is the Newport PowerLED which may also be used with 12V or 24VAC (supplied from a magnetic transformer). Careful attention must be made to assure that the transformer used with the Newport PWL operates at a frequency of 60hz. If this is not the case, permanent damage to the fixture and dimmer will most likely result. Imtra will not be responsible for damage caused by using a non-compatible transformer with the Newport PowerLED. Nor will we cover damage done as a result of using any transformer with our other PowerLED products.

Imtra PowerLED Installation

Before beginning, please read these instructions. Verify the ship's voltage and obtain the appropriate tools necessary to complete the installation. The wire type to connect these products should be selected in accordance with the appropriate regulatory standards and codes to provide each unit with its stated wattage capacity. Using a DVM or oscilloscope, verify the power at each unit has the correct voltage. Imtra PowerLED products operate with input voltage of 10-30VDC from breaker panel supplied by ship's batteries. The exception is the Newport PWL which may also be used with approved 60 hz rated transformer (see details in previous section above). Ensure the breaker is turned off before beginning the installation.

Each of these products is designed to radiate heat generated within the LED circuit through its integral heatsink/housing. It is important that the unit not be wrapped in insulation and that it be exposed to open airspace above the ship's "headliner". This allows for proper convection along the unit's cooling fins and will assure a junction temperature that result in maximum life of the LED diode(s).

For wiring installation, refer to Figure 1 (PowerLED sub assembly wiring diagram).

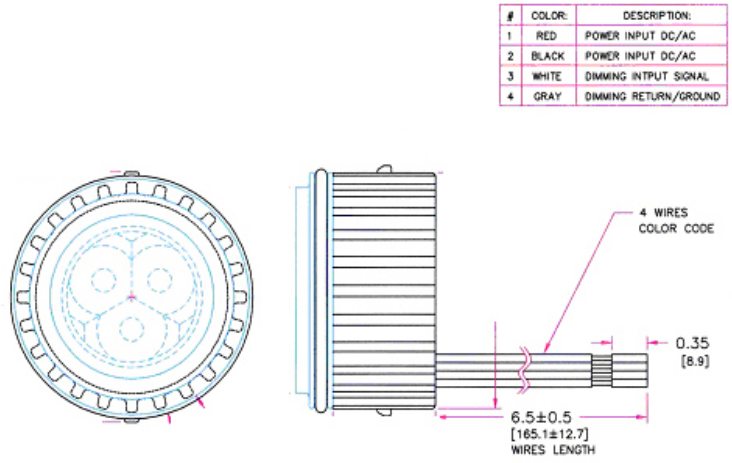

#	COLOR:	DESCRIPTION:
1	RED	POWER INPUT DC/AC
2	BLACK	POWER INPUT DC/AC
3	WHITE	DIMMING INTPUT SIGNAL
4	GRAY	DIMMING RETURN/GROUND

Each IML PowerLED product has four lead wires. The red (pos) and black (neg) lines are for power. Either wire may accept positive or negative polarity✸. The white and gray wires are for the dimmer interface. If an Imtra PWM dimmer is to be used, the white input lead is to be connected to the "DIM - out" signal from the Imtra dimmer. The gray lead is "ground" or "return" and should be connected to the "Dim – return" lead on the Imtra dimmer. If dimming is not to be used, each "dim" line should be individually capped and stowed.

✸***Note:*** *Power provided to the IML PowerLED must not go through conventional dimmers which would affect voltage input. Power must come directly from power source (ie battery, DC power supply).*

Figure 1 Power LED Sub-Assembly Wire Diagram

PWM Dimmer Installation

For installation of Imtra PWM Dimmer, refer to Figure 2 (picture of dimmer) and Figure 3 (Dimmer wiring diagram). It is recommended that the dimmer module be located within 30' of the first control switch (i.e. the yellow and green control wires). This minimizes the possibility of electromagnetic interference. Input voltage range is 10-30VDC*. The red and black lines are for power. Either wire may accept positive or negative polarity. The Dim-out (white wire)

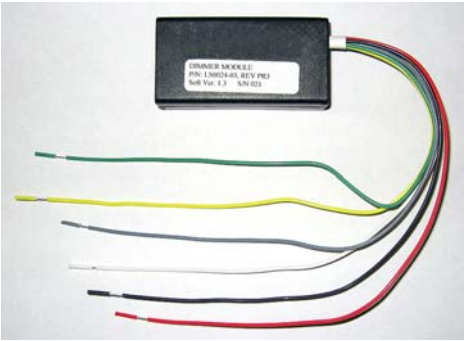

Figure 2 PWM Dimmer Diagram

of the dimmer connects to the Dim-In (white wire) from the LSA. Each Dimmer supports up to 15 IML PowerLED units. For multiple LED units, always connect your wiring using a parallel circuit to assure each device receives the same voltage. Connect the Dim – Return (gray wire) of the dimmer to the Dim- Return (gray wire) of the IML PowerLED.

*** Note: The Newport PWL (only) may also be used with 60 hz output magnetic transformer.**

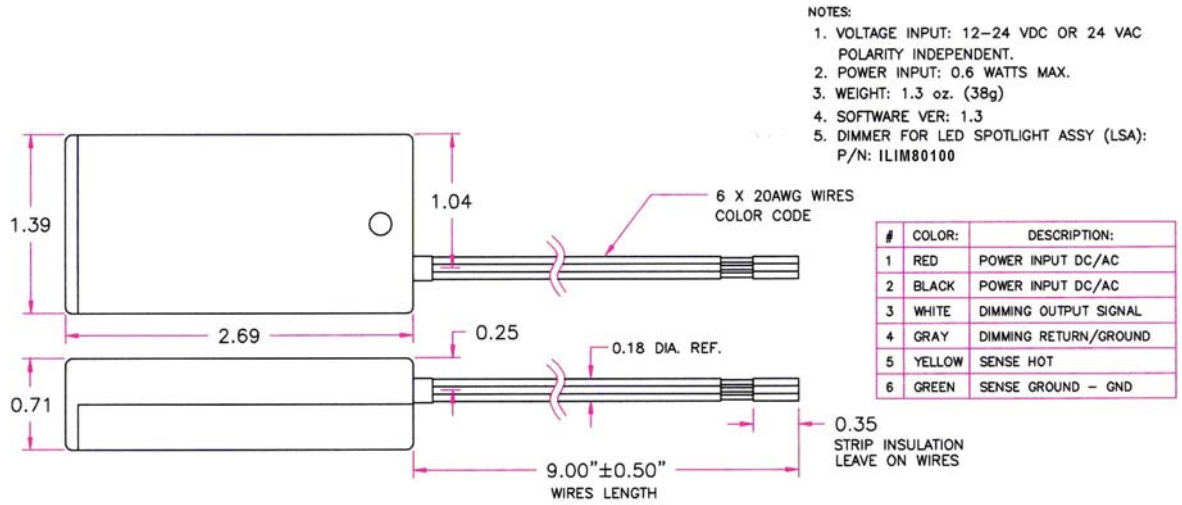

Figure 3 - Dimmer Wiring Diagram

The dimmer is compatible with any normally-open momentary pushbutton switch (closure type) control device. Wire the yellow and green wires across this type of switch. The dimmer supports a 3-way on/off control feature whereby a second (or more) switch can be used to turn on or off the IML Power LED. These additional momentary pushbutton switches may be wired in parallel to the yellow and green control lines. Up to 15 IML PowerLEDs may be connected to a single dimmer. Figure 4 depicts wiring for a multiple unit installation.

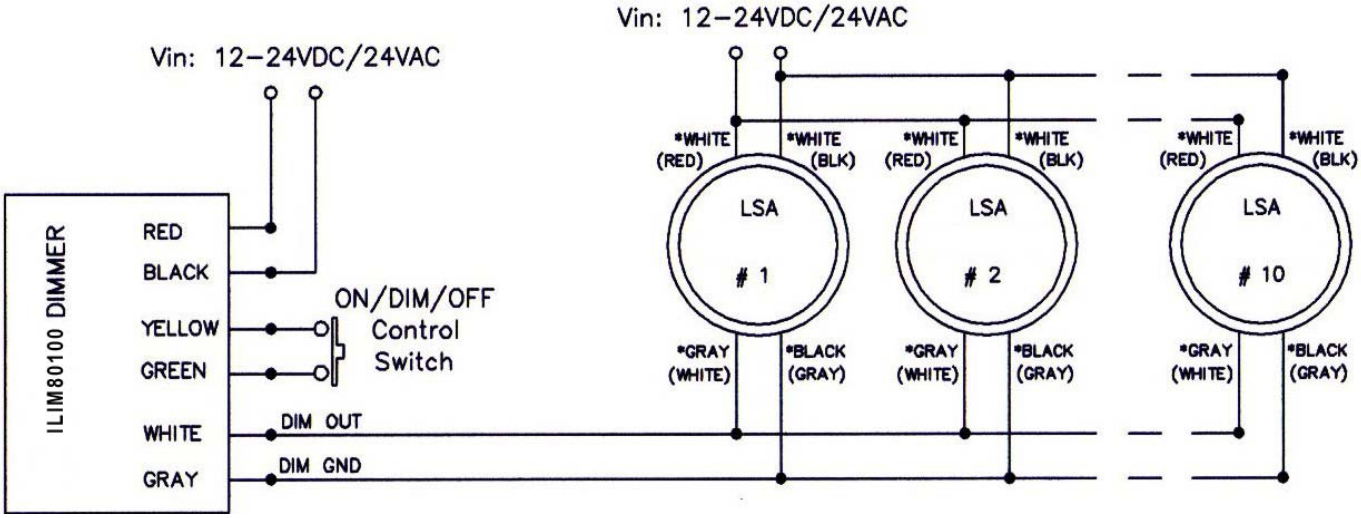

Figure 4 – Wiring diagram for Dimming multiple Imtra PowerLEDs

Limited Warranty

- Imtra warrants the light-emitting LSA (LED spotlight assembly) component of our IML PowerLED spot lights & fixtures for 5 years from the date of purchase. If the LSA should cease to function within 5 years, return the complete spot light assembly to Imtra for repair or replacement.
- This warranty does not apply to damage resulting from actions of the user such as misuse, improper wiring/installation, operation outside of specification, improper maintenance or repair, unauthorized modification, lightning strike or damage from a power surge.
- The trim ring (bezel) of the IML Power LED spot lights are warranted for either two years (stainless steel or powder coated) or one year (gold or satin-nickel) depending on the finish of the fixture.
- Imtra specifically disclaims any implied warranties or merchantability or fitness for a specific purpose and will not be liable for any direct, indirect, incidental or consequential damages. Imtra's total liability is limited to repair or replacement of the product.
- The warranty set forth above is inclusive and no other warranty, whether written or oral, is expressed or implied.
- If it should become necessary to return a fixture for service during or beyond the warranty period, please refer to Imtra's standard Return Policy as detailed on Imtra's website (www.imtra.com) or call Imtra customer service at (508) 995-7000.
- No returns are accepted without a Return Authorization (RA) number.